LONAKO®
XIAMEN LONAKO INDUSTRY & TRADE CO., LTD
Tel: +86-592-5689172 Fax: +86-592-5689173 Web: www.lonako.com
Add: N307, Weiye Building, China Pioneering Park,Xiamen, Fujian361009, P.R.China

OPERATION and MAINTENANCE INSTRUCTIONS

Product Name: Lifeboat Light

Product Type: LNK-LBL1

LNK-LBL2

Document No.: LNK-OM-LBL

Version: A0

Total Pages: 7 pages in total

Effective Date: March 16, 2021

TABLE OF CONTENTS

SECTION Ⅰ PURPOSE.....2
SECTION Ⅱ DESCRIPTION.....2
SECTION Ⅲ INSTALLATION INSTRUCTIONS.....4
SECTION Ⅳ STORAGE REQUIREMENTS.....5
SECTION Ⅴ SERVICE LIFE & SAFETY.....5
SECTION Ⅵ INSPECTION.....6
SECTION Ⅶ MAINTENANCE.....6
SECTION Ⅷ REPAIR AND DISPOSAL INSTRUCTIONS.....6
SECTION Ⅸ PACKAGING INFORMATION.....7
SECTION Ⅹ MANUFACTURER INFORMATION.....7

SECTION Ⅰ PURPOSE

The operation and maintenance instruction is used to guide users how to operate and maintain LNK-LBL series lifeboat light properly.

SECTION Ⅱ DESCRIPTION

2.1 Introduction

LNK-LBL series LED lifeboat light is a professional signal light for marine lifeboats and rescue boats. The products meet the requirements of SOLAS, USCG and CCS regulations and obtain relevant certification. The products adopt high-brightness LED light source, it also have the advantages of modern appearance, durable, excellent performance and -52℃ polar low temperature resistance. The product is supplied by DC 12 / 24V power and controled by switch through the input cable. Once activated it will providing corresponding light indication signal for lifeboat. The functional uses of different models are as follows:

--LNK-LBL1 exterior lifeboat light is installed on the top of lifeboat / rescue boat. When the light turned on, it will continuously output flashing white light signal with light intensity >4.3cd to indicate the position of lifeboat / rescue boat;

--LNK-LBL2 internal lifeboat light is installed in the lifeboat cabin. When the light turned on, it will emit a constant light with average light intensity >0.5cd for reading the instructions of life saving appliances.

2.2 Product Structure

2.2.1 LNK-LBL lifeboat light consists of main body, LED lamp, installation shim, input cable. The structure is shown as below Figure2-1:

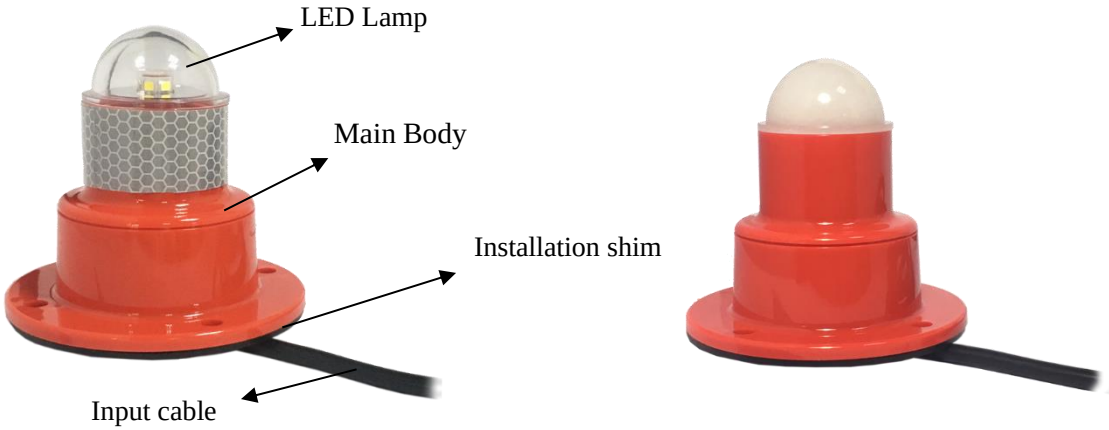

LNK-LBL1 Exterior light LNK-LBL2 Internal light

Figure 2-1 Product Structure

2.3 Technical Parameter

Table 2-1 Technical parameter

Product		Lifeboat light
Light source		7* LED
Chromaticity		White
Input power		DC 12V / 24V
LNK-LBL1 Exterior light	**Power**	≦5Watt
	Function	Flashing （50～70 times/min.）
	Intensity	≧4.3 cd（Actual- average 20cd）
LNK-LBL2 Internal light	**Power**	≦1.5Watt
	Function	Steady
	Intensity	＞0.5 cd（Actual- average 7.0cd）
Water proof		IP67
Storing Temperature		-52℃ ～ +65℃
Working Temperature		-52℃ ～ +65℃
Product Validity		5 Years
Dimension		Φ96*90mm
Cable Length		3 meters, accept customized
Weight		280±10g（incl. cable）
Activation		Power Switch
Working time		＞12H
Performance		Endure -52℃ low temperature, Fire-resistant, Oil-resistant, Mould-proof, Corrosion-proof, Water-proof, Dust-proof, Resistance UV
Environment Performance		Meet RoHS and asbestos-free requirement
Product Standards		MSC 81(70) as amended、USCG 161.101、IEC60945:2002 as amended, ISO24408:2004
Certification		MED\USCG\CCS

2.4Marking

2.4.1 The standard product markings of LNK-LBL lifeboat light is shown in Figure 2-2:

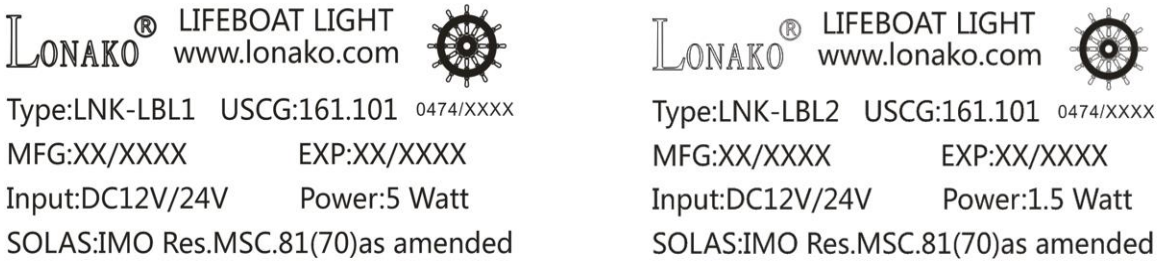

Figure 2-2

2.4.1.1 the Marking will be fixed on surface of the light`s main body by laser marking as or by label sticker;

2.4.1.2 The content of marking includes:

① Basic Ex information: Product name, Product Code number, Input voltage, power, product validity;

② Manufacturer LOGO ;

③ Certified mark and certification body number .

2.4.2 MFG batch number and EXP. Date show the latest status of light and manufacturing batch. They will be shown as MM/YYYY, "MM" at Figure 2-2 represents the month of manufacturing /expired date , "YYYY" at Figure 2-2 represents the year of manufacturing /expired date.

SECTION Ⅲ INSTALLATION INSTRUCTIONS

3.1 Installation Limitation

LNK-LBL series lifeboat lights are suitable for all kinds of lifeboats/rescue boats that can provide DC 12V or 24V power supply. The product should be installed in a flat surface position to ensure waterproof function.

3.2 Product Installation

3.2.1 LNK-LBL1 lifeboat exterior lights are usually installed on the top of lifeboats or rescue boats or at a higher level, and ensure that the LED lamp is visible and unobstructed from the horizontal 360°; LNK-LBL2 lifeboat interior lights are usually installed on inside of the lifeboats cabin, and it should ensure that the installation can provide the necessary reading illumination, and does not affect the aisle passage of person.

3.2.2 Take out the installation shim before installation, and make the input cable go through the center of the shim. Then drill the installation fixing hole and the cable through-hole according to the selected suitable installation position and product dimension. The dimension of the product base is shown in Figure 3-1.

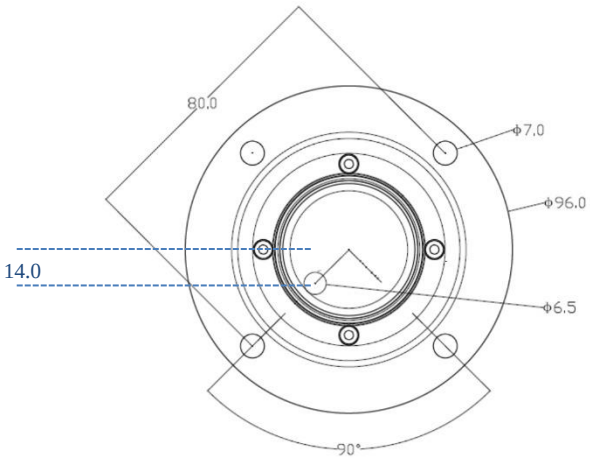

Unit：mm

Figure 3-1 Dimension drawing of the bottom

3.2.3 After drilling the installation holes, pass the input power cable through the cable hole and start wiring. The original input cable length is 3 meters by default, users should prepare extended cable of corresponding length according to actual needs. And connect the product to the power supply and control board of the boat as shown in Figure 3-2. During the wiring process, pay attention to strictly distinguish the positive and negative poles, and ensure that the joint position of the extension power cord is properly processed.

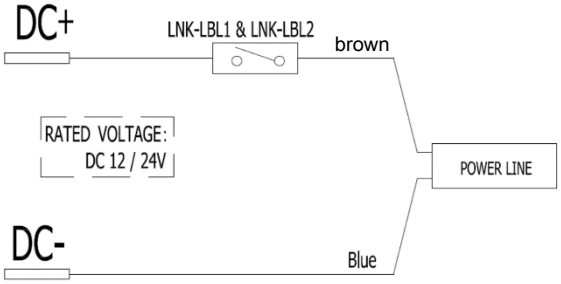

Figure 3-2

3.2.4 After wiring process completed, place the mounting shim between the product and the boat wall, and properly lock the product with 4* M6 stainless steel screws as shown in Figure 3-3, and the product installation should be complete.

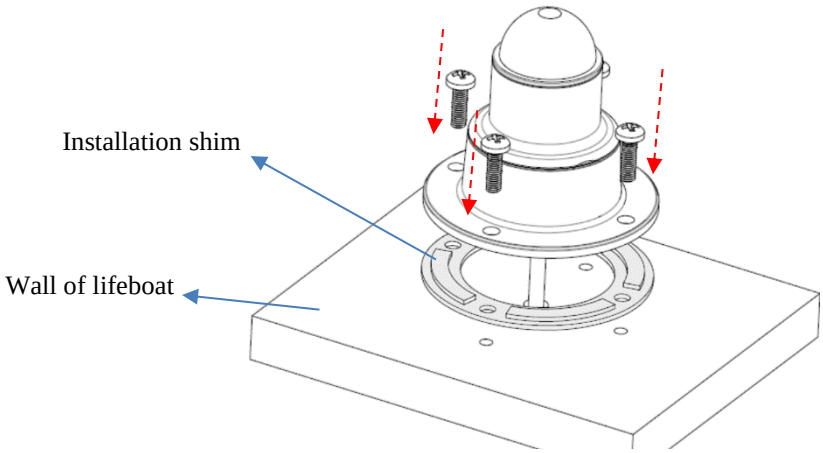

Figure 3-3

SECTION Ⅳ STORAGE REQUIREMENTS

4.1 Storage Environment Requirements

LNK-LBL lifeboat light should be stored in a clean, non-pollution and Non-corrosive liquid environment.

4.2 Storage Temperature and Humidity Requirements

Storage temperature should be within -52℃～+ 65℃（-61.6°F~ + 149°F） and the environment humidity should be less than 80%.

SECTION Ⅴ SERVICE LIFE & SAFETY

5.1 Service life:

Under proper maintenance and usage follow the instruction, the LNK-LBL lifeboat light is valid for five years from the date of manufacture.

5.2 Product safety:

The wiring process of the lifeboat light input power cable should be performed by a licensed professional electrician, and the product should be connected in accordance with the wiring method required by Clause 3.2.3 .

SECTION Ⅵ INSPECTION

6.1 Inspection Time

LNK-LBL series lifeboat lights should be inspected at least once a year, or regularly inspected together with the installed lifeboat/rescue boat life-saving equipment.

6.2 Inspection Methods

The inspection method of the product is as follows:

1) Visually inspect the appearance of the product for any damage or corrosion, and whether the lampshade is clean and transparent;

2) Check the expiration date of the product, if the product has exceeded the expiration time of the mark, it should be replaced in time;

3) Turn on the product through the control panel, and visually check whether the product is working properly and can send out corresponding light signals.

SECTION Ⅶ MAINTENANCE

7.1 The user only needs to confirm whether the product is functioning normal or not when the lifeboat light is in use, and it is usually maintenance-free at other times.

7.2 When cleaning the product, just use ordinary damp cloth. Do not use alcohol, thinner or other corrosive reagents to wipe the product.

7.3 when the product is not functioning well, the user should first check whether the wire connection of the product input wire and the extended wire joint is okay.

SECTION Ⅷ REPAIR AND DISPOSAL INSTRUCTIONS

8.1 Repair Instructions

1) If there is a problem with the input cable wiring, it should be inspected and repaired by a licensed professional electrician.

2) Except for cable wiring problems, the product cannot be disassembled or repaired. When the lamp cannot work normally within the validity period, the user should contact and consult the dealer or manufacturer.

8.2 Disposal Instructions

Users need to dispose of defective and invalid products in accordance with local environmental regulations, and it is recommended to complete the disposal and recycling work through a qualified organization.

SECTION Ⅸ PACKAGING INFORMATION

9.1 The lights will be packed by Unit box and Master carton .

9.2 One master carton contains 20 units lifeboat lights. The size of master carton is 585*250*305 mm and gross weight of each master carton package is about 9.0 kgs.

9.3 Customized package may be available under request.

SECTION Ⅹ MANUFACTURER INFORMATION

Company name: XIAMEN LONAKO INDUSTRY & TRADE CO., LTD.

Add: N307, Weiye Building, China Pioneering Park, Xiamen, Fujian361009, China

Tel：+86-592-5689172

Fax：+86-592-5689173

Email：info@lonako.com

Web：www.lonako.com